B-TECH AV MOUNTS

AV AWARDS 2017
MANUFACTURER OF THE YEAR
WINNER

B-TECH AV MOUNTS

EASY TORSION-TILT SYSTEM

BT8431

UNIVERSAL FLAT SCREEN WALL MOUNT WITH TILT

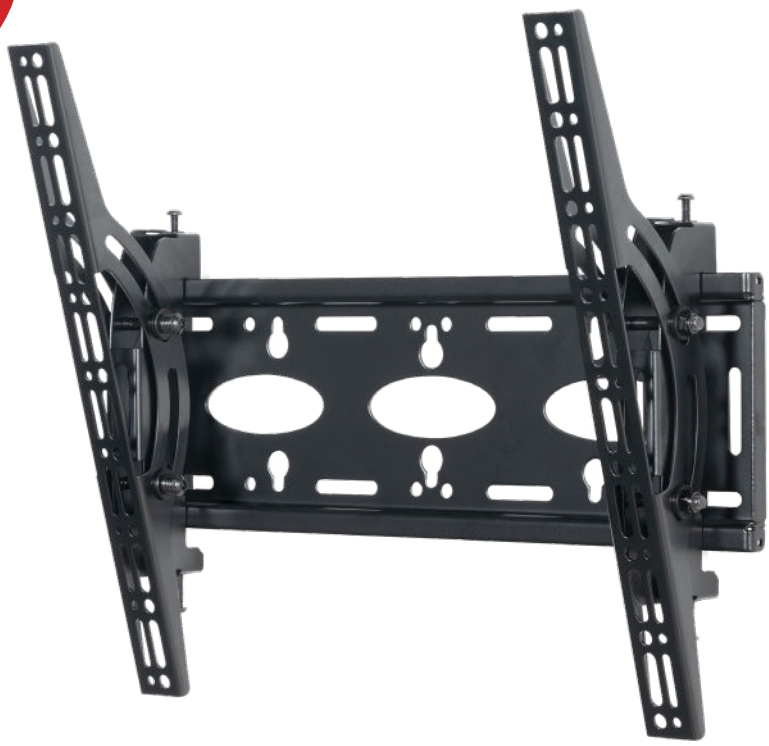

Designed to mount medium to large sized screens, the BT8431 is a flat screen wall mount that features a unique 'Torsion-Tilt' mechanism which allows easy tilt adjustment of the screen up to +/-15°. Also suitable for pole mounting using B-Tech's Accessory Collars, the BT8431 features levelling screws to adjust the screen level post installation as well as locking screws which help prevent unauthorised removal of the screen.

SPECIFICATION	
Recommended screen size	39" - 55"
Max load	50kg
VESA® & non-VESA fixings	up to 468 x 400mm
Tilt	+/-15°
Distance from wall (flat)	81mm
Distance from wall (full tilt)	148mm
Colour	Black



FEATURES

- Unique 'Torsion-tilt' mechanism for easy tool-less adjustment
- Lateral adjustment of screen once mounted
- Keyhole mounting for easy installation
- Levelling screws allow adjustment of screen height
- Security locking screws and Allen key to prevent unauthorised screen removal
- Collar compatible ideal for pole mounting
- Simple 'hook-on' installation with all mounting hardware included



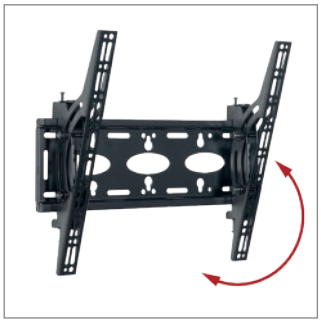

Unique 'Torsion-Tilt' mechanism allows for easy tilt adjustment up to +/-15°

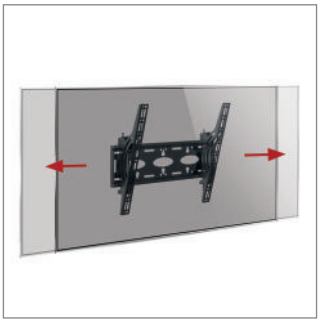

Post installation lateral screen alignment for perfect screen positioning

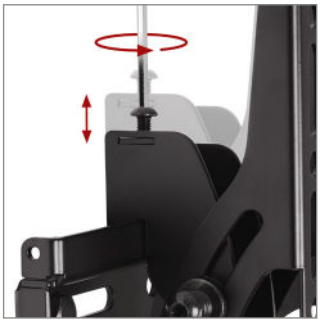

Arms feature levelling screws to adjust the screen height once mounted



Security locking screws and Allen key provided for a secure installation

TECHNICAL DRAWINGS

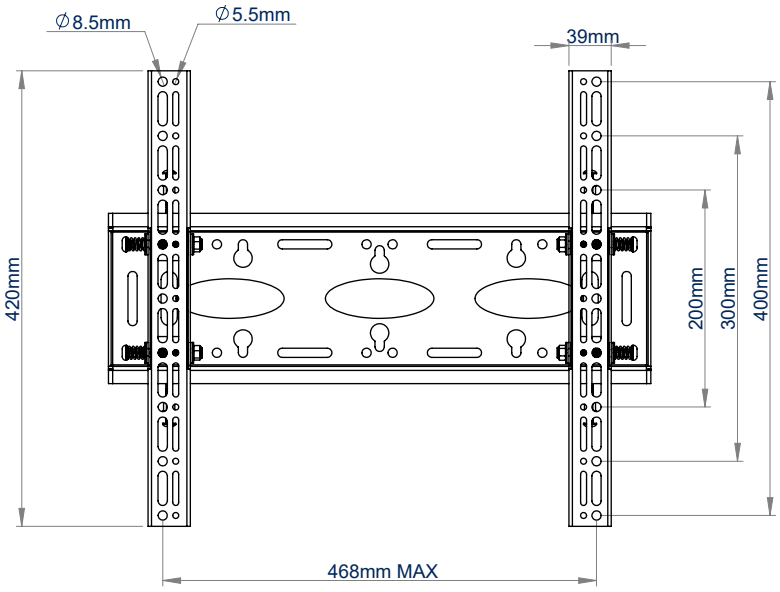

FRONT VIEW

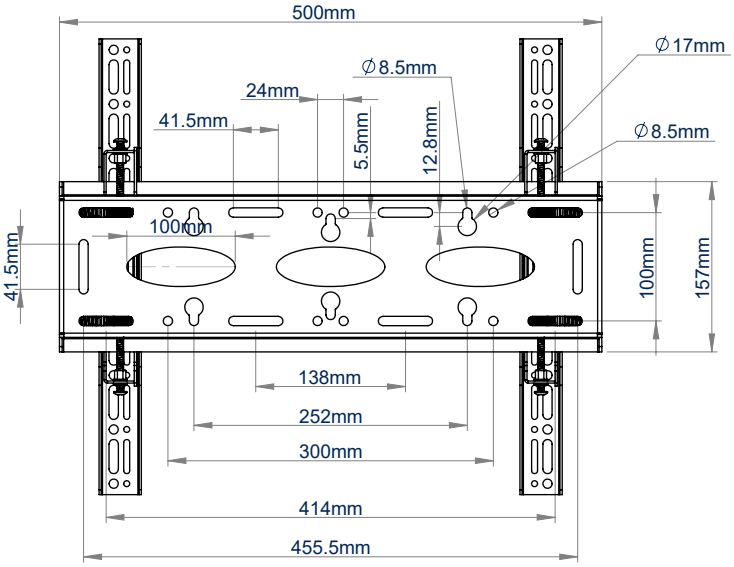

WALL PLATE - FRONT VIEW

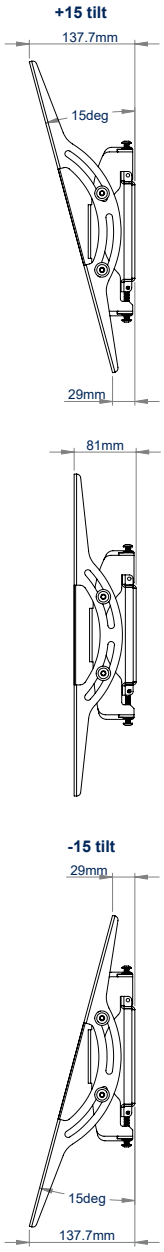

SIDE VIEWS

PACKING INFORMATION

COLOUR:	ORDER REF:	EAN CODE:	MASTER CARTON QTY:	INNER CARTON QTY:	MASTER CARTON WEIGHT:	MASTER CARTON CUBE:
Black	BT8431/B	5019318084270	2	0	8.9kg	0.028cbm

ACCESSORIES AND RELATED PRODUCTS

BT7822



Heavy Duty Floor / Ceiling Mount
Can be used in conjunction with B-Tech poles and collars to create pole mounted solutions

BT7850



50mm Diameter Poles are available in a choice of 6 lengths and can be used to create multiple pole mounted solutions

BT7841



Ø50mm Accessory Collars can be fixed to the BT8431 to allow the mount to be attached to a pole

BT8441

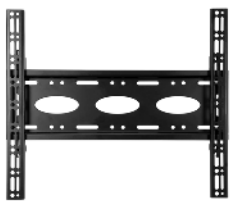

Universal Flat Screen Wall Mount for screens up to 55"

© 2021 B-Tech International Design & Manufacturing Ltd. All rights reserved.
The information in this specification sheet is correct at the time of publication. However, we reserve the right to change specifications without prior notice.
All other brands and products are trademarks of their respective owners. All B-Tech images and symbols are exclusive property of B-Tech International Design & Manufacturing Ltd.
B-Tech accepts no liability for loss or damage caused by improper installation or mounting on unstable structures. Any reproduction or transmission or republication of any part of this specification without prior written permission is not allowed by B-Tech International Design & Manufacturing Ltd. E&OE.

SS-BT8431-V4-140122